# DESIGN AND IMPLIMENTATION OF BOOST CONVERTER WITH HIGH STEP UP RATIO

MINI PROJECT REPORT

*Submitted to the APJ Abdul Kalam Technological University*

*in partial fulfillment of the requirements for the award of the Degree*

of

*Master of Technology*

in

POWER ELECTRONICS

*Submitted by*

**KICHU SURESH S - TVE25EEPE09**

*Guided by*

**Dr. DEEPA MU**

Assistant Professor

**DEPARTMENT OF ELECTRICAL ENGINEERING**

**COLLEGE OF ENGINEERING TRIVANDRUM**

**KERALA**

**APRIL 2026**

**DEPARTMENT OF ELECTRICAL ENGINEERING**

**COLLEGE OF ENGINEERING TRIVANDRUM**

**2025 - 26**

# CERTIFICATE

This is to certify that the project report entitled **"DESIGN AND IMPLEMENTATION OF BOOST CONVERTER WITH HIGH STEP UP RATIO"** is a bonafide record of the Mini project work done by **KICHU SURESH S** of 2nd semester M.Tech in Power Electronics under my guidance towards the partial fulfillment of the requirements for the award of M.Tech degree in **Power Electronics** of the APJ Abdul Kalam Technological University of Kerala during the year 2026.

**Dr. Deepa M U**
Assistant Professor
Project Guide
Electrical & Electronics Engineering
College of Engineering Trivandrum

**Prof. M ROYKUMAR**
Associate Professor
Program & Project Coordinator
Electrical & Electronics Engineering
College of Engineering Trivandrum

**Dr. LAL PRIYA P S**
Professor
PG Coordinator
Electrical & Electronics Engineering
College of Engineering Trivandrum

**Dr. Arun Kishore W. C.**
Professor
Head of the Department
Electrical & Electronics Engineering
College of Engineering Trivandrum

# DECLARATION

I, **KICHU SURESH S** hereby declare that the project report **"DESIGN AND IMPLEMENTATION OF BOOST CONVERTER WITH HIGH STEP UP RATIO"**, submitted for partial fulfillment of the requirements for the award of the degree of Master of Technology with specialization in Power Electronics of the APJ Abdul Kalam Technological University, Kerala is a bonafide work done by me under the supervision of Prof. Dr. Deepa M U. I have adequately and accurately cited and referenced the original sources. I also declare that I have adhered to ethics of academic honesty and integrity and have not misrepresented or fabricated any data or idea or fact or source in our report. I understand that any violation of the above will be a cause for disciplinary action by the institute and/or the University and can also evoke penal action from the sources which have thus not been properly cited or from whom proper permission has not been obtained. This report has not been previously formed the basis for the award of any degree, diploma, or similar title of any other University.

**Place**: Thiruvananthapuram

**Date**: 30 April 2026

**KICHU SURESH S**

# ACKNOWLEDGEMENT

First of all, I take this opportunity to offer my sincere gratitude and appreciation to everyone who guided me in doing this project successfully. I would like to express my deepest appreciation and gratitude to **Dr. Arun Kishore W. C.**, Head of the Department, Department of Electrical Engineering, for her wholehearted cooperation and encouragement.

I gratefully acknowledge my gratitude to my guide, **Dr. Deepa M U**, Assistant Professor, Department of Electrical Engineering, College of Engineering Trivandrum, for all the guidance and support throughout the course.

I express my gratitude to project coordinator **Prof. M. Roykumar**,Associate Professor and stream head, Department of Electrical Engineering, College of Engineering, Trivandrum, for all necessary help extended to us during the evaluation process.

I also express my gratitude to **Dr. Lal Priya P.S**, Professor and PG coordinator, Department of Electrical Engineering, College of Engineering, Trivandrum, for all necessary help extended to us during the evaluation process.

I also convey my gratitude to **Prof. M RoyKumar**, Associate Professor and stream head, Department of Electrical Engineering, College of Engineering, Trivandrum, for all necessary help extended to us during the evaluation process.

I also acknowledge my gratitude to all other members of the faculty in the Department of Electrical Engineering, our family members, and friends who contributed to the successful fulfillment of my project work.

**KICHU SURESH S**

# ABSTRACT

Conventional boost converters operating at extreme duty ratios to interface low-voltage renewable energy sources suffer from severe conduction losses, voltage stress, and reverse recovery issues. To mitigate these limitations, the topology integrates a coupled inductor to extend the static voltage gain without requiring extreme duty cycles. Furthermore, an auxiliary resonant circuit comprising a secondary switch, resonant inductor, and resonant capacitor is utilized to achieve Zero Voltage Switching (ZVS) for the main switch and Zero Current Switching (ZCS) for the auxiliary switch.

This architectural synergy significantly reduces switching power losses and electromagnetic interference (EMI), thus boosting the overall conversion efficiency. Detailed steady-state analysis and operational mode evaluations are carried out to characterize the converter's electrical behavior under various transient and steady-state conditions. A rigorous mathematical model is derived to determine the core parameters for a 100 W system stepping up 24 V to 120 V at a high-frequency switching rate of 25 kHz. The integration of these elements ensures that the thermal stress on the semiconductor devices is kept to an absolute minimum, thereby extending the operational lifespan of the converter.

Simulation studies in MATLAB Simulink validate theoretical predictions, open-loop output regulation, reduced device stress, and clear ZVS/ZCS transitions, alongside closed-loop proportional-integral (PI) controller testing for dynamic load variations. To corroborate the theoretical and simulated designs, a 100 W laboratory hardware prototype is implemented. While the control circuitry and customized magnetic components were successfully fabricated, current efforts are focused on optimizing gate signal timing and mitigating parasitic effects to completely bridge the gap between simulation validation and preliminary physical hardware output. The topology ultimately remains a highly viable, compact, and reliable solution for advancing photovoltaic systems, fuel cells, and modern DC microgrids.

# Contents

**List of Figures** **v**

**List of Tables** **vii**

**1 Introduction** **1**

1.1 Background . . . . . 2

1.2 Problem Statement . . . . . 3

1.3 Outline of the Report . . . . . 4

**2 Literature Review** **6**

**3 Problem Identification** **10**

3.1 Motivation . . . . . 10

3.2 Objectives . . . . . 12

**4 Schematic and Modes of Operation** **14**

4.1 Circuit Diagram . . . . . 14

4.2 Modes of Operation . . . . . 16

4.2.1 Mode 1 ($t_0 - t_1$) . . . . . 16

4.2.2 Mode 2 ($t_1 - t_2$) . . . . . 17

4.2.3 Mode 3 ($t_2 - t_3$) . . . . . 17

4.2.4 Mode 4 ($t_3 - t_4$) . . . . . 17
4.2.5 Mode 5 ($t_4 - t_5$) . . . . . 18
4.2.6 Mode 6 ($t_5 - t_6$) . . . . . 18
4.2.7 Mode 7 ($t_6 - t_7$) . . . . . 18

**5 System Design and Calculations** **20**
5.1 Design Specifications for DC-DC Boost Converter with High Step Up Ratio . . . 20
5.2 Mathematical Modelling . . . . . 21
5.3 Designed Parameters for DC-DC Boost Converter with High Step Up Ratio . . . 22
5.4 Inductor Modeling . . . . . 23
5.4.1 Coupled Inductor Design . . . . . 23
5.4.2 Resonant Inductor Design . . . . . 24
5.5 Inductor Design Summary . . . . . 24

**6 Result Analysis** **26**
6.1 Simulation Circuit Diagrams . . . . . 26
6.2 Simulation Circuit Diagrams . . . . . 26
6.3 Open-Loop Simulation Results . . . . . 29
6.4 Closed-Loop Simulation Results . . . . . 32

**7 Hardware Implementation** **34**
7.1 Control Circuitry and Signal Verification . . . . . 34
7.2 Magnetic Components and Testing . . . . . 36

**8 Conclusion** **38**
8.1 Future Scope . . . . . 39

**References** **40**

# List of Figures

4.1 DC-DC Soft switching Boost converter with high step up ratio . . . . . 16

4.2 Detailed theoretical switching waveforms accurately illustrating the seven distinct resonant and power-transfer modes of operation over a single switching cycle. . . . . 19

6.1 Open-loop Simulink diagram of the soft-switching DC-DC boost converter. . . 27

6.2 Closed-loop simulation model with PI controller for robust voltage regulation. 28

6.3 Simulated output voltage and input voltage profiles operating perfectly at a full load of $P_L$ = 100W. . . . . 29

6.4 Steady-state switching waveforms of the high step-up DC-DC Softswitching Boost Converter. (a) Gate pulse of main switch S1. (b) Gate pulse of auxiliary switch Slr . (c) Resonant inductor current Ilr . (d) Voltage across main switch S1 (VS1). (e) Current across main switch S1 (IS1). (f) Voltage across auxiliary switch Slr (VSlr ). (g) Current across auxiliary switch Slr (ISlr ). . . . . 30

6.5 Zero voltage and Zero Current waveforms of the main switch at full load PL = 100W. (a) Gate pulse of main switch S1. (b) Voltage VS1 of main switch S1 showing ZVS turn-on. (c) Current IS1 of main switch S1.. . . . . 31

6.6 Switching waveforms across the auxiliary resonant switch at PL = 100W. (a) Gate pulse of auxiliary switch Slr . (b) Voltage VSlr of auxiliary switch Slr . (c) Resonant current ISlr of auxiliary switch Slr . . . . . 32

6.7 Output voltage regulation performance under closed-loop control at full load $P_L$ = 100W. (a) Input voltage $V_s$ undergoing a step disturbance. (b) Regulated output voltage $V_h$ maintaining steady-state. . . . . 33

7.1 Arduino microcontroller control setup and the integrated high-speed TC4427 gate driver circuitry. . . . . 35

7.2 PWM output of Arduino and gate driver output in DSO . . . . . 36

7.3 The physically completed and customized coupled inductor assembly utilizing the E-core ferrite. . . . . 37

# List of Tables

5.1 Designed Parameters for DC-DC Boost Converter with High Step Up Ratio . . . 23

5.2 Designed parameters of Inductor . . . . . 25

# Chapter 1

# Introduction

As the global energy infrastructure aggressively transitions toward sustainable and decentralized generation, the integration of low-voltage renewable energy sources—such as photovoltaic arrays and fuel cells—into high-voltage DC microgrids has become a paramount engineering challenge. This introductory chapter establishes the foundational background of this transition, highlighting the critical necessity for advanced power electronic interfaces capable of highly efficient, massive voltage amplification. Conventional boost converters attempting to bridge this significant voltage mismatch are forced to operate at extreme duty ratios, inevitably suffering from severe conduction losses, destructive semiconductor voltage stress, and detrimental reverse-recovery issues. Driven by these persistent limitations, this chapter articulates the core problem statement and the primary motivation behind the research: the urgent industrial need to replace reactive, hard-switched architectures with highly optimized, thermally efficient topologies. Consequently, the specific objectives of this project are clearly defined, focusing on the rigorous mathematical design, computational simulation, and physical hardware implementation of a high step-up DC-DC converter that uniquely synergizes a coupled-inductor framework with an auxiliary active-clamp resonant circuit to guarantee Zero Voltage Switching (ZVS). Finally, this chapter outlines the overall

structural organization of the report, providing a comprehensive roadmap detailing how the subsequent theoretical analysis and empirical validations are systematically presented.

## 1.1 Background

High step-up DC-DC converters are widely used in renewable energy systems, such as photovoltaic (PV) arrays, fuel cells, and wind energy conversion systems, to efficiently bridge the voltage mismatch between low-voltage DC sources and high-voltage DC buses [4, 13]. As the global energy infrastructure transitions toward decentralized microgrids, the demand for compact and highly efficient power converters has surged. While conventional boost converters are commonly employed for this task due to their simplicity, they exhibit intrinsic physical and electrical limitations when attempting to achieve extraordinarily high conversion ratios. Specifically, they require extreme duty ratios which inevitably lead to limited voltage gain, severe current and voltage stresses on semiconductor devices, and unacceptably high switching losses [17].

To strategically address these persistent challenges, advanced topologies utilizing coupled inductors have emerged as a highly effective method for achieving high step-up voltage gain without the need for pushing duty cycles to their extreme limits [2, 6]. However, standard coupled-inductor converters often operate under hard-switching conditions, which results in overlapping voltage and current profiles during state transitions. This leads to significantly increased switching losses at high power levels, elevating the thermal dissipation requirements and thereby reducing the overall efficiency and power density of the system. Therefore, integrating soft-switching techniques—specifically Zero Voltage Switching (ZVS) and Zero Current Switching (ZCS)—is highly critical [5, 9]. These techniques act to mitigate the aforementioned losses, drastically reduce electromagnetic interference (EMI), and substantially improve the long-term reliability of the power converter.

## 1.2 Problem Statement

Despite the recent technological advancements in high-gain converter architectures, several primary and interrelated challenges remain in conventional systems used for renewable energy applications [14]:

- **Extreme Duty Cycle Dependency:** High duty cycle operation significantly increases conduction losses and induces severe reverse recovery problems in output diodes, which degrades performance.

- **Component Stress and Degradation:** Substantial voltage stress on main switching components mandates the use of devices with high voltage ratings, which typically feature higher ON-state resistance ($R_{DS(on)}$), thereby reducing the overall reliability and lifespan of the converter.

- **Thermal and EMI Issues:** Hard-switching conditions at high power levels exacerbate power dissipation and thermal management issues, requiring bulky heat sinks that contradict the demand for high power density. Furthermore, the sharp $di/dt$ and $dv/dt$ transients produce severe electromagnetic interference (EMI) that can disrupt nearby sensitive control electronics.

Consequently, there is a pressing and well-documented need for a high step-up DC-DC converter that can achieve a high voltage gain while simultaneously and effectively mitigating switching losses through the integration of reliable soft-switching mechanisms.

To overcome these distinct limitations, this project proposes the comprehensive design, simulation, and implementation of a Soft-Switching Converter with High Step-Up Ratio. This topology innovatively synthesizes the following elements:

- A **coupled inductor** to achieve high step-up voltage gain efficiently, completely avoiding the extreme duty ratios required by conventional boost converters and effectively

utilizing the turns ratio for voltage multiplication.

- An **auxiliary resonant circuit** consisting of an auxiliary active switch ($S_{1r}$), a properly sized resonant inductor ($L_r$), and a resonant capacitor ($C_r$).
- **Precise Soft-switching techniques** that mathematically guarantee the main switch ($S_1$) achieves Zero Voltage Switching (ZVS) and the auxiliary switch ($S_{1r}$) achieves Zero Current Switching (ZCS) during every switching cycle.

By meticulously utilizing this advanced architecture, the converter minimizes semiconductor voltage and current stress, substantially reduces dynamic switching losses, and fundamentally improves overall efficiency. This research work includes the detailed mathematical design, MATLAB Simulink validation, and the subsequent hardware implementation of the converter to physically confirm its high efficiency and dynamic stability for demanding renewable-energy applications.

## 1.3 Outline of the Report

The project report is meticulously structured to provide a comprehensive, step-by-step understanding of the complete development cycle of a high step-up soft-switching DC-DC converter. Chapter 1 introduces the foundational project background, contextualizing the rapidly evolving landscape of modern power electronics and the industrial necessity for efficient energy conversion. Chapter 2 presents a deeply detailed literature review that systematically analyzes contemporary high-gain converter topologies, tracing their historic evolution to identify critical gaps in legacy architectures. Armed with this academic context, Chapter 3 explicitly articulates the engineering motivation driving the research. It defines the specific technical objectives of the undertaking, establishing the framework required to achieve massive voltage gain while effectively mitigating destructive thermal losses.

Transitioning from theoretical foundations to precise technical application, the report explores the core converter architecture. Chapter 4 presents the exact circuit schematic and provides an in-depth, sequential breakdown of the seven distinct modes of operation. This section thoroughly explains the complex microsecond-level timing that dynamically governs the resonant soft-switching transitions. Following this operational blueprint, Chapter 5 focuses intensely on the mathematical design parameters. It outlines the specific governing equations, rigorous copper winding calculations for the coupled magnetics, and the exact physical component specifications strictly required to safely construct a highly efficient 100 W laboratory setup without inducing magnetic core saturation.

The final phase of the document is dedicated to rigorous empirical validation and physical hardware realization. Chapter 6 thoroughly analyzes the computational performance of the topology, discussing both the baseline open-loop characteristics and the dynamically regulated closed-loop simulation results obtained from MATLAB Simulink. Translating these simulated models into reality, Chapter 7 carefully details the physical hardware implementation. It covers the digital control strategy, the amplification of high-speed gate signals, and the manual fabrication of custom magnetic components. Finally, Chapter 8 concludes the comprehensive report by summarizing the core empirical findings and discussing the highly potential future scope of the architecture, including printed circuit board (PCB) layout optimizations and grid-tied integration.

# Chapter 2

# Literature Review

Research on high step-up DC–DC converters has significantly intensified over the last decade, directly driven by the rapid global deployment of photovoltaic (PV) systems, electric vehicles (EVs), distributed DC microgrids, and other low-voltage renewable-energy technologies. One of the major engineering challenges in these domains is efficiently boosting low-level DC voltages to substantially higher bus levels without incurring excessive switching stress, prohibitive conduction losses, or overwhelming design complexity. As a result, a wide range of topologies—such as coupled-inductor converters, voltage-multiplier-based converters, switched-inductor architectures, and multi-stage quadratic/cubic designs—have emerged as potential solutions. The following literature review synthesizes the key findings and pivotal contributions from the selected peer-reviewed works relevant to high-gain converter development.

Sakthiram et al. (2025) proposed a highly advanced single-switch ultra–high step-up DC–DC converter targeted specifically for photovoltaic energy conversion applications [1]. Their innovative topology integrates a switched-inductor network with an enhanced quadratic boost architecture and passive voltage multiplier cells, enabling exceptionally high voltage gain at moderate duty ratios while maintaining a simple, highly reliable single-switch

control strategy. The authors effectively demonstrated that this structural combination significantly reduces voltage and current device stress, improves steady-state efficiency, and ensures continuous input current—an essential requirement for PV interfaces to minimize electrical stress on solar modules. A detailed experimental laboratory prototype thoroughly validated the theoretical operation, confirming stable dynamic behavior under varying loads, reduced input ripple, and high overall conversion efficiency. This work strongly emphasizes the growing industry trend toward compact, single-switch high-gain converters that achieve superior performance without relying on highly complex multi-switch control arrangements.

Earlier, Schmitz, Martins, and Coelho (2020) provided a highly comprehensive conceptual framework for designing and accurately classifying high step-up DC–DC converters employing coupled inductors and voltage multiplier techniques [2]. Their extensive research analyzed various gain-extension mechanisms and presented generalized mathematical models that completely unify the operating principles of many existing, disparate topologies. A major contribution of their work lies in systematically explaining how the precise combination of coupled inductors and capacitive multiplier cells successfully enhances voltage gain while simultaneously reducing the voltage stress imposed on the primary semiconductor devices. They meticulously compared multiple architectures in terms of gain performance, duty-ratio sensitivity, active switch stress, and passive component utilization, thus offering highly valuable design guidelines for engineers seeking to optimize converter performance in modern renewable-energy and electric-power applications. This paper serves as an indispensable foundational text for deeply understanding the physical limitations and true potential of CI–VMC hybrid converters.

Saadat et al. (2016) investigated a high step-up converter employing a coupled inductor combined with a robust voltage multiplier cell, representing one of the earliest practical and successful demonstrations of CI–VMC synergy for high-gain applications [3]. Their specific topology achieved substantial voltage step-up capability while keeping the operational

duty ratio well within practical, safe limits. By effectively using the magnetic coupling effect, they were able to extend the conversion ratio far beyond that of a conventional standard boost converter without substantially increasing the total component count or system footprint. The integrated multiplier cell further enhanced the voltage gain and simultaneously acted to significantly reduce the voltage stress across the active switch and output diodes. Their experimental hardware results definitively confirmed high efficiency and moderate component stress, formally establishing this approach as a highly promising alternative for PV arrays and fuel-cell system front-end converters. The work also accurately highlighted typical engineering challenges associated with coupled inductors, including high-frequency core losses and leakage energy management, which later iterative studies specifically aimed to address.

Complementing the above advancements, Mishra et al. (2025) recently conducted a broad, systematic review of DC–DC converter topologies explicitly for electric vehicle (EV) charging stations, providing crucial insights into the rapidly evolving requirements of high-gain converters in transportation electrification [4]. Their deep analysis thoroughly covered conventional, isolated, and modern non-isolated converter families, ultimately identifying high step-up non-isolated converters as undeniably critical components in onboard chargers, auxiliary power units, and heavy-duty traction systems. They strongly highlighted the absolute necessity of high efficiency, compact volumetric size, extremely low electromagnetic interference (EMI), and the vital ability to seamlessly integrate with next-generation wide-bandgap semiconductor devices such as Silicon Carbide (SiC) and Gallium Nitride (GaN) switches. The review also underscored common persistent challenges such as thermal management under heavy loads, input/output ripple suppression, and the difficulty of achieving high power density—all of which heavily influence modern high-gain converter design strategies. The authors clearly emphasized that advanced topologies utilizing multiplier networks, switched-inductor schemes, or highly coupled inductors are increasingly

preferred globally due to their unique ability to provide substantial voltage gain while strictly maintaining acceptable device stress and thermal efficiency levels.

Collectively, these meticulously researched studies demonstrate a very clear technological progression in the field: evolving from early basic coupled-inductor–multiplier designs to highly optimized, single-switch multi-gain-extension architectures specifically designed for rigorous real-world PV and EV applications. The compiled literature consistently and overwhelmingly underscores the critical importance of achieving massive high voltage gain without resorting to an excessive duty ratio, thereby minimizing device stress, ensuring continuous and smooth input current, and maintaining superb high efficiency. Furthermore, the accelerating trend toward single-switch or low-switch-count architectures directly reflects the power industry's demand for simpler, robust control methodologies, significantly lower manufacturing costs, and fundamentally improved long-term reliability. These compiled developments form the rock-solid foundation upon which the present project builds, actively addressing persistent legacy challenges such as high device stress, detrimental input ripple, and component-utilization inefficiencies while aggressively pursuing superior gain and highly practical hardware feasibility.

In reviewed literature confirms that achieving ultra-high voltage gain for renewable energy applications requires advanced topologies, like coupled inductors, to bypass the limitations of extreme duty cycles. However, these architectures often introduce severe dynamic challenges, primarily unmitigated hard-switching power losses and thermal degradation. Therefore, the critical frontier in converter design is achieving high gain with pristine thermal efficiency. This insight motivates the proposed project, which addresses this exact literary gap. By integrating a coupled-inductor framework with an active-clamp resonant circuit, the architecture guarantees Zero Voltage Switching (ZVS) and Zero Current Switching (ZCS), effectively resolving persistent hard-switching bottlenecks.

# Chapter 3

# Problem Identification

## 3.1 Motivation

Modern renewable-energy systems, particularly photovoltaic (PV) arrays and hydrogen fuel cells, typically operate at relatively low and highly fluctuating DC voltages due to the stochastic nature of solar irradiance and the inherent polarization curves of chemical cells. However, modern grid-interfacing circuits, advanced DC microgrids, and electric vehicle (EV) auxiliary systems often require significantly higher and rigidly stable DC voltage levels (typically 120V to 400V) for effective, safe, and efficient power transfer. Bridging this substantial, dynamic voltage mismatch inherently necessitates the use of advanced high step-up DC–DC converters equipped with exceptional static continuous-conduction gain, superior thermodynamic conversion efficiency, and robust dynamic performance against sudden load step-changes.

Conventional standard boost converters suffer from several inherent and unavoidable physical limitations when subjected to these modern high-gain requirements. To achieve large voltage multiplication, these basic topologies are forced to operate at extreme duty cycles (often mathematically exceeding 0.85). Operating at such extreme duty limits reduces

the diode conduction time to a mere fraction of the switching period, which leads to excessively large peak current ripples. This extreme current concentration forces massive $I^2R$ conduction losses through the copper traces and semiconductor channels. Furthermore, the limited OFF-time severely exacerbates problematic reverse recovery issues in standard output diodes, while parasitic resistances within the inductors and capacitors physically cap the maximum achievable gain, severely reducing overall efficiency due to unmitigated hard-switching power losses.

Although basic coupled-inductor topologies effectively extend this voltage gain without relying on extreme duty cycles by utilizing the magnetic turns ratio, they introduce their own set of complex engineering problems. Specifically, they still largely operate under hard-switching conditions, and the unavoidable leakage inductance inherent to any coupled magnetic core generates massive, destructive voltage spikes across the primary switch during the turn-off transient. In legacy systems, these spikes are mitigated using dissipative passive RCD (Resistor-Capacitor-Diode) snubber circuits, which simply absorb the leakage energy and wastefully burn it off as pure heat. This makes thermal management and switching loss mitigation a persisting and major engineering bottleneck, particularly as operational power levels and switching frequencies scale upward to reduce the physical footprint of the magnetic components.

These critical operational gaps strongly highlight the acute need for a specialized converter that can achieve ultra-high voltage gain while simultaneously eliminating thermal waste, reducing semiconductor device stress, and maintaining overall design simplicity. Traditional interleaved, cascaded, or multi-stage quadratic boost converters, while highly capable of producing high gain, often demand exceptionally complex digital control schemes, perfectly synchronized multiple gate drivers, and high passive component counts. This clearly motivates the development of a highly integrated, single-stage soft-switching coupled-inductor DC-DC converter. By intelligently introducing an auxiliary active-clamp resonant

circuit, the proposed system captures the destructive leakage energy and recycles it to mathematically guarantee Zero Voltage Switching (ZVS) for the main switch and Zero Current Switching (ZCS) for the auxiliary switch. This actively eliminates the overlapping $V \times I$ transition losses, allowing for dramatically cooler operation and efficient higher-frequency scaling.

Moreover, the harsh electromagnetic interference (EMI) generated by the severe $di/dt$ and $dv/dt$ transients in traditional hard-switched converters poses a critical threat to the sensitive digital communication networks embedded within modern smart grids. Mitigating this EMI usually requires bulky, expensive filtering elements that further degrade system volumetric power density and inflate manufacturing costs. By integrating an active-clamp soft-switching mechanism, the proposed topology inherently smooths these hazardous transient spikes, drastically curtailing electrical noise emissions directly at the source. This operational refinement not only ensures strict compliance with international power quality standards but also heavily reduces the thermal fatigue imposed on the semiconductor junctions. Consequently, the Mean Time Between Failures (MTBF) of the entire converter is significantly extended, yielding a highly resilient, cost-effective, and deeply reliable architecture perfectly aligned with the rigorous long-term demands of commercial microgrids and electric transportation infrastructures.

## 3.2 Objectives

The primary objective of this research work is to design, analyze, and validate a highly efficient high step-up soft-switching DC–DC converter specifically tailored for integration with low-voltage renewable energy sources. To effectively bridge the critical engineering gap between theoretical high-gain converter topologies and practical, thermally robust hardware implementations, the specific objectives are systematically defined as follows:

- **Topological Formulation and Mathematical Modeling:** Design and mathematically model a robust high-gain converter topology that effectively utilizes a precisely engineered coupled inductor operating seamlessly alongside an auxiliary active-clamp resonant circuit.

- **Computational Validation:** Simulate the soft-switching converter utilizing the advanced MATLAB Simulink environment for a 100 W system application (safely stepping up a 24 V input source to a regulated 120 V DC-link). This includes strictly verifying the successful achievement of both Zero Voltage Switching (ZVS) and Zero Current Switching (ZCS) under steady-state conditions.

- **Physical Prototyping:** Develop a fully functional 100 W hardware prototype (24 V to 120 V) utilizing appropriate, high-speed control circuitry. This involves implementing an Arduino-based programmable timing controller and low-impedance MOSFET gate drivers to flawlessly execute the nanosecond-precision resonant transitions.

- **Empirical Evaluation:** Validate the stable output voltage regulation, experimentally verify the clean switching characteristics absent of severe high-frequency ringing, and analyze the improved thermal efficiency through rigorous hardware laboratory evaluation and measurement.

# Chapter 4

# Schematic and Modes of Operation

This chapter presents a comprehensive structural overview and a detailed transient analysis of the high step-up soft-switching DC-DC converter. To effectively overcome the thermodynamic and electrical limitations inherent to conventional hard-switched boost topologies, this architecture synergistically merges a coupled-inductor voltage multiplier with a precision active-clamp resonant network. The subsequent sections systematically introduce the complete physical circuit schematic, delineate the specific functional roles of both the primary and auxiliary passive components, and rigorously analyze the distinct topological modes of operation. By breaking down the steady-state continuous conduction cycle into its discrete temporal intervals, this chapter provides the foundational operational framework required to fully understand the high-frequency energy transfer and zero-voltage switching (ZVS) dynamics of the converter system.

## 4.1 Circuit Diagram

The converter circuit consists of a highly sophisticated high step-up architecture that intelligently integrates a primary coupled inductor with a specifically tuned auxiliary resonant

circuit. In a traditional standard boost converter, a simple single-winding energy-storage inductor is utilized. In this topology, that basic inductor is replaced entirely with a tightly coupled inductor framework featuring a primary winding ($L_{m1}$) and a secondary winding ($L_{m2}$). This powerful substitution allows the fundamental voltage conversion ratio to be vastly magnified directly through the turns ratio ($N$), essentially decoupling the high voltage gain from the requirement of an extreme duty cycle.

However, to successfully resolve the massive switching power losses that are inherently native to high-frequency hard-switching transitions, an auxiliary network is introduced. This network features an auxiliary active switch ($S_{1r}$), a precisely calculated resonant inductor ($L_r$), and a specifically sized resonant capacitor ($C_r$). These components are connected in parallel with the main power switch ($S_1$).

By applying an intelligently optimized, microcontroller-generated delay control signal to the auxiliary switch, an electrical resonance trough is purposely formed between $L_r$ and $C_r$. This highly specific timing sequence ensures that the absolute voltage across the main switch $S_1$ safely drops completely to zero immediately before the main gate driver turns it ON, flawlessly realizing Zero Voltage Switching (ZVS). Similarly, the resonant action forces the current through the auxiliary switch to start from zero, allowing it to easily achieve Zero Current Switching (ZCS). Consequently, the topology brilliantly delivers a massive high conversion ratio at a very moderate and stable duty cycle while actively maximizing overall system efficiency and aggressively minimizing thermal output. The complete schematic of this proposed architecture, building upon the foundational soft-switching framework established in [5], is illustrated in Figure 4.1.

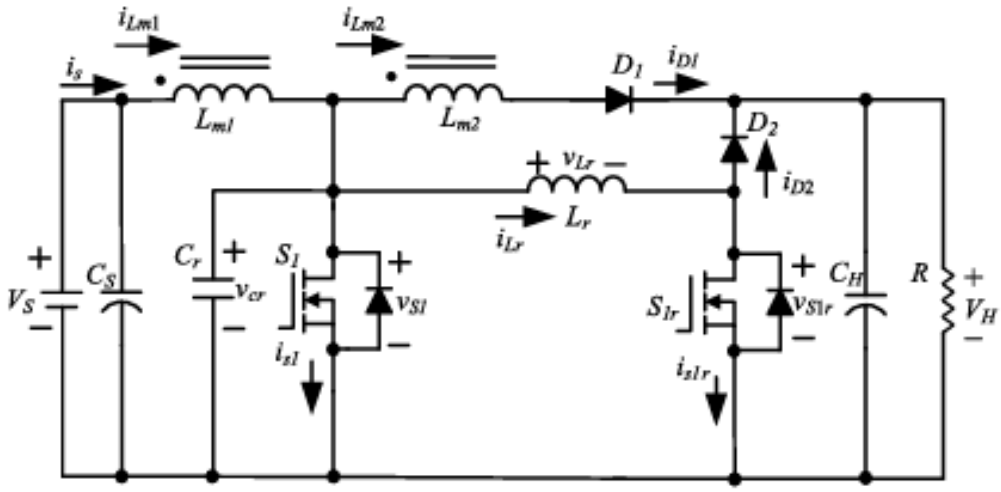


**Figure 4.1:** DC-DC Soft switching Boost converter with high step up ratio

## 4.2 Modes of Operation

The steady-state dynamic operation of the soft-switching converter is systematically divided into seven highly distinct operating modes within a single switching period. These sequential modes precisely govern the complex energy transfer through the coupled inductor and dictate the resonant transitions required to completely eliminate overlap losses.

### 4.2.1 Mode 1 ($t_0 - t_1$)

In this initial start-up mode, the main power switch $S_1$ remains completely OFF. The auxiliary switch $S_{1r}$ is actively turned ON. During this interval, the voltage across the resonant inductor $L_r$ is virtually equivalent to the input source $V_S$. Consequently, the resonant inductor current $i_{Lr}$ begins to increase linearly from zero. This specific condition guarantees that the auxiliary switch safely achieves Zero Current Switching (ZCS) exactly at turn-on, preventing immediate power spikes.

### 4.2.2 Mode 2 ($t_1 - t_2$)

As the timeline progresses, the resonant inductor current continues to linearly rise while $S_{1r}$ remains actively ON. At this critical juncture, the resonant capacitor $C_r$ begins discharging its stored electrical energy, effectively initiating a deep resonance trough between $L_r$ and $C_r$. As this high-frequency resonance rapidly progresses, the voltage measured across the resonant capacitor $v_{Cr}$ gradually and smoothly decreases to absolute zero, successfully preparing the circuit for the activation of the main switch.

### 4.2.3 Mode 3 ($t_2 - t_3$)

The moment $v_{Cr}$ drops completely to zero, the intrinsic body diode of the main power switch $S_1$ becomes forward-biased and naturally begins to conduct current. This highly crucial conduction phase physically clamps the voltage directly across $S_1$ to zero. With the voltage firmly clamped, the main gate driver commands $S_1$ to turn ON. Because the voltage is already zero prior to the gate signal arriving, the switch successfully and flawlessly achieves Zero Voltage Switching (ZVS). Almost simultaneously, the auxiliary switch $S_{1r}$ is commanded OFF to conclude the resonant initiation.

### 4.2.4 Mode 4 ($t_3 - t_4$)

In this phase, the main switch $S_1$ is fully ON and securely conducting the primary current. The output diode $D_2$ becomes forward-biased due to the circuit dynamics, allowing the actively charged resonant inductor to rapidly transfer its previously stored kinetic energy directly to the output load circuit. As this energy transfer completes, the current flowing through the resonant inductor smoothly drops back to zero. This organically causes diode $D_2$ to naturally turn OFF under highly desirable ZVS/ZCS conditions, effectively eliminating diode reverse-recovery losses.

### 4.2.5 Mode 5 ($t_4 - t_5$)

This specific mode essentially functions identically to the standard conduction state observed in a conventional boost converter. The main switch $S_1$ remains heavily ON, pulling current from the source. The primary side of the massive coupled inductor $L_{m1}$ begins to vigorously store magnetic energy linearly directly from the main input source $V_S$. This mode represents the primary energy accumulation phase, dictating the bulk of the power transfer capabilities of the system.

### 4.2.6 Mode 6 ($t_5 - t_6$)

To end the power stroke, the main switch $S_1$ is abruptly turned OFF. Immediately, the heavy primary inductor current loses its direct path to ground and instead begins to rapidly charge the resonant capacitor $C_r$. The presence of this capacitor means that the voltage across $C_r$ (and thus directly across $S_1$) increases gradually over time rather than spiking abruptly. This intentional capacitive snubbing action critically minimizes the turn-off switching overlap losses for $S_1$. This mode safely concludes when $v_{Cr}$ reaches parity with the source voltage $V_S$.

### 4.2.7 Mode 7 ($t_6 - t_7$)

In this final resting state, both the primary switch $S_1$ and the auxiliary switch $S_{1r}$ are fully OFF. The massive magnetic energy stored deeply within the core of the coupled inductor during the previous ON-state is violently forced to transfer to the output load. This occurs through the highly coupled secondary winding $L_{m2}$ and passes through the main output diode $D_1$. Diode $D_1$ achieves smooth ZVS as it naturally conducts this heavy energy transfer. This exact state persists until the next sequential switching cycle initiates once again with Mode 1.

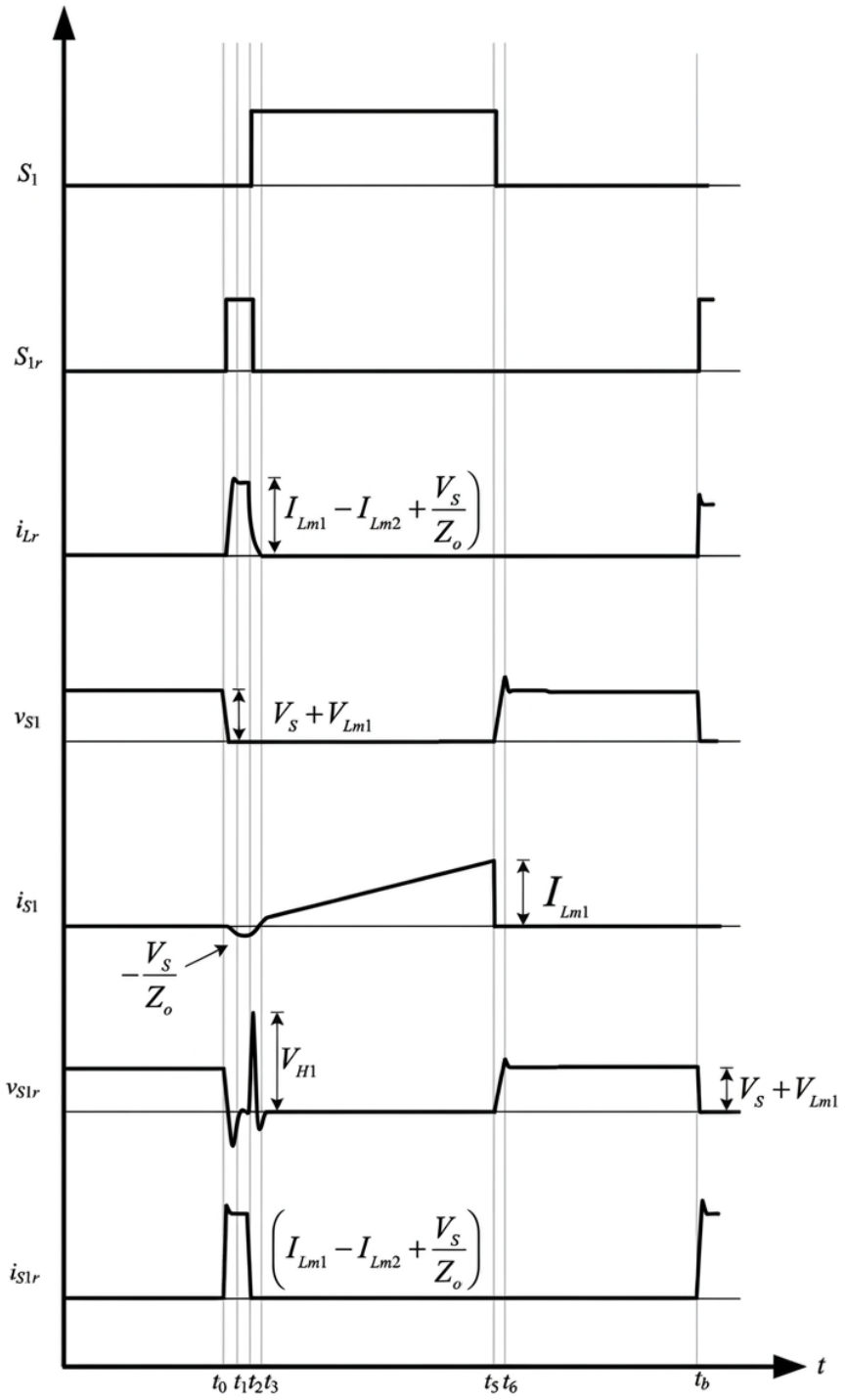


**Figure 4.2:** Detailed theoretical switching waveforms accurately illustrating the seven distinct resonant and power-transfer modes of operation over a single switching cycle.

# Chapter 5

# System Design and Calculations

## 5.1 Design Specifications for DC-DC Boost Converter with High Step Up Ratio

For accurate laboratory hardware validation and corresponding high-fidelity software simulation, a 100 W physical prototype is meticulously designed. This deliberate power scaling ensures that all necessary physical components remain readily available for fabrication while absolutely preserving the core ZVS/ZCS soft-switching mechanisms intrinsic to the complex coupled inductor architecture. The primary operational specifications dictating the design are strictly listed below:

- Input voltage ($V_s$): 24 V
- Output voltage ($V_H$): 120 V
- Rated Output Power ($P_o$): 100 W
- Switching Frequency ($f_s$): 25 kHz
- Turns Ratio ($N$): 2

## 5.2 Mathematical Modelling

The fundamental voltage gain equation for this specific coupled-inductor topology explicitly determines the required operational duty ratio ($D$) needed to achieve the target output. This relationship factors in both the active switch ON-time and the magnetic transformer effect:

$$\frac{V_H}{V_s} = \frac{1+ND}{1-D} \tag{5.1}$$

By carefully substituting the target $V_H = 120$ V and the source $V_s = 24$ V, along with the selected turns ratio $N = 2$, the required active duty ratio $D$ is mathematically calculated to be exactly 0.57. This moderate duty cycle avoids the extreme values (e.g., >0.85) that plague traditional converters.

The equivalent static load resistance representing the 100 W system at full capacity is calculated directly using Ohm's and Watt's laws:

$$R_{out} = \frac{V_H^2}{P_{out}} = \frac{120^2}{100} = 144\ \Omega \tag{5.2}$$

The primary average input current drawn from the 24 V source is calculated assuming an ideal, lossless power transfer scenario, providing a baseline for component sizing:

$$I_{in(avg)} = \frac{P_{out}}{V_s} = \frac{100}{24} \approx 4.16\ \text{A} \tag{5.3}$$

To strictly maintain Continuous Conduction Mode (CCM) across the operational envelope, the primary magnetizing inductance ($L_{m1}$) requires a highly specific minimum threshold value. Through iterative design and safety margin inclusion, this was designed to be exactly 82.75 $\mu$H. Using this defined baseline inductance, we determine the expected peak-to-peak current ripple flowing through the primary core during the active switching

phase:

$$\Delta i_{Lm} = \frac{V_s \cdot D}{L_{m1} \cdot f_s} = \frac{24 \times 0.57}{82.75 \times 10^{-6} \times 25 \times 10^3} \approx 6.61 \text{ A} \tag{5.4}$$

This specific peak-to-peak current ripple is a critical parameter that dictates the ultimate physical sizing of the magnetic core to prevent catastrophic saturation.

The absolute peak primary current that the semiconductor switches and the magnetic wire must momentarily endure is thus:

$$I_{peak} = I_{in(avg)} + \frac{\Delta i_{Lm}}{2} = 4.16 + \frac{6.61}{2} = 7.46 \text{ A} \tag{5.5}$$

The secondary inductance ($L_{m2}$), physically wound on the exact same core, is directly proportional to the primary inductance multiplied by the square of the turns ratio:

$$L_{m2} = N^2 \times L_{m1} = 2^2 \times 82.75 = 331 \ \mu\text{H} \tag{5.6}$$

The mutual inductance ($M$), representing the shared magnetic flux between the primary and secondary windings, assuming a highly efficient and tightly coupled ferrite core ($K = 0.99$), is given by the geometric mean:

$$M = K\sqrt{L_{m1}L_{m2}} = 0.99\sqrt{82.75 \times 331} = 163.845 \ \mu\text{H} \tag{5.7}$$

## 5.3 Designed Parameters for DC-DC Boost Converter with High Step Up Ratio

Based on the extensive mathematical formulations and dynamic operational constraints calculated above, Table 5.1 presents the comprehensive final parameter selection perfectly utilized for both the internal simulation modeling and the physical hardware setup construc-

tion.

**Table 5.1:** Designed Parameters for DC-DC Boost Converter with High Step Up Ratio

| **Parameter** | **Designed Value** |
|---|---|
| Input Voltage ($V_s$) | 24 V |
| Output Voltage ($V_H$) | 120 V |
| Output Power ($P_{out}$) | 100 W |
| Duty Ratio ($D$) | 0.57 |
| Switching Frequency ($f_s$) | 25 kHz |
| Load Resistance ($R_{out}$) | 144 Ω |
| Primary Average Current ($I_{in(avg)}$) | 4.16 A |
| Coupled Inductor Primary ($L_{m1}$) | 82.75 $\mu$H |
| Coupled Inductor Secondary ($L_{m2}$) | 331 $\mu$H |
| Mutual Inductance ($M$) | 163.845 $\mu$H |
| Coupling Coefficient ($K$) | 0.99 |
| Clamp/Resonant Capacitor ($C_c$) | 10 $\mu$F - 47 $\mu$F |
| Resonant Inductor ($L_r$) | 7.5 $\mu$H |
| Output Capacitor ($C_{out}$) | 47 $\mu$F - 100 $\mu$F |

## 5.4 Inductor Modeling

### 5.4.1 Coupled Inductor Design

For the main magnetic core, a high-quality E 36/18/11 Ferrite Core is specifically utilized due to its excellent high-frequency characteristics (Cross-sectional Area $A_c = 1.2 \times 10^{-4}$ m$^2$, Maximum Saturation Flux Density $B_{max} \approx 0.3$ T). To completely avoid total core saturation under the absolute peak operational currents calculated previously, the strict minimum number of primary winding turns ($N_1$) required is calculated as follows:

$$N_{1(min)} = \frac{L_{m1} \cdot I_{peak}}{B_{max} \cdot A_c} = \frac{82.75 \times 10^{-6} \times 7.46}{0.3 \times 1.2 \times 10^{-4}} = 17.4 \text{ turns} \tag{5.8}$$

This mathematically derived value is purposefully rounded up to $N_1 = 20$ turns to provide a safe magnetic operational margin and for practical, geometric symmetric winding on the

physical bobbin. The secondary turns ($N_2$) are strictly calculated utilizing the established step-up turns ratio ($N = 2$):

$$N_2 = N_1 \times N = 20 \times 2 = 40 \text{ turns} \tag{5.9}$$

### 5.4.2 Resonant Inductor Design

For the secondary resonant inductor ($L_r = 7.5\ \mu$H), which handles the highly volatile resonance trough, a physical airgap ($l_g$) of 2 mm (0.002 m) is introduced to prevent rapid localized saturation. The gapped inductance factor ($A_L$) representing the core's ability to store energy is determined using the precise permeability of free space ($\mu_0 = 4\pi \times 10^{-7}$ H/m):

$$A_L \approx \frac{\mu_0 \cdot A_c}{l_g} = \frac{4\pi \times 10^{-7} \times 1.2 \times 10^{-4}}{0.002} \approx 75.4 \text{ nH/T}^2 \tag{5.10}$$

Subsequently, using this specific core factor, the exact required number of physical resonant inductor turns ($N_r$) is:

$$N_r = \sqrt{\frac{L_r}{A_L}} = \sqrt{\frac{7.5 \times 10^{-6}}{75.4 \times 10^{-9}}} \approx 10 \text{ turns} \tag{5.11}$$

## 5.5 Inductor Design Summary

The successful physical realization of the DC-DC high step-up soft-switching Boost converter heavily depends on the precision and thermodynamic efficiency of its custom magnetic components. The comprehensive magnetic modeling calculations, governing physics equations, and the absolute final chosen winding configurations are neatly encapsulated and presented in Table 5.2. Rather than relying on off-the-shelf inductors that are fundamentally ill-suited for specialized high-gain resonant topologies, this systematic mathematical derivation provides a highly optimized blueprint tailored specifically for the 100 W, 25 kHz

operational envelope. This table serves as the direct, authoritative fabrication guide for the physical hardware assembly phase.

**Table 5.2:** Designed parameters of Inductor

| **Parameter** | **Governing Equation** | **Final Designed Value** |
|---|---|---|
| Average Input Current ($I_{in(avg)}$) | $I_{in(avg)} = \frac{P_{out}}{V_s}$ | 4.16 A |
| Peak-to-Peak Current Ripple ($\Delta I_{Lm}$) | $\Delta I_{Lm} = \frac{V_s \cdot D}{L_{m1} \cdot f_s}$ | 6.61 A |
| Absolute Peak Current ($I_{peak}$) | $I_{peak} = I_{in(avg)} + \frac{\Delta I_{Lm}}{2}$ | 7.46 A |
| Primary Winding Turns ($N_1$) | $N_1 = \frac{L_{m1} \cdot I_{peak}}{B_{max} \cdot A_c}$ | 20 turns |
| Secondary Winding Turns ($N_2$) | $N_2 = N_1 \times N$ | 40 turns |
| Gapped Inductance Factor ($A_L$) | $A_L = \frac{\mu_0 \cdot A_c}{l_g}$ | 75.4 nH/T$^2$ |
| Resonant Inductor Turns ($N_r$) | $N_r = \sqrt{\frac{L_r}{A_L}}$ | 10 turns |
| Wire Gauge Selection | Skin-effect and high-frequency handling | 20–22 AWG |

As detailed in the summary above, accurately establishing the absolute peak current ($I_{peak}$ = 7.46 A) is a fundamentally critical step in the physical design process. This peak value directly dictates the absolute maximum magnetic flux density ($B_{max}$) forced into the E 36/18/11 ferrite core during the heaviest phase of the power stroke. By explicitly sizing the primary and secondary windings ($N_1 = 20$, $N_2 = 40$) based on this peak transient limit, the design mathematically guarantees that the core will never enter the highly destructive magnetic saturation region, even under heavy 100 W continuous load conditions. Preventing core saturation is absolutely mandatory; a saturated core behaves effectively as an electrical short circuit, which would instantly trigger catastrophic avalanche failure in the primary semiconductor switches.

Furthermore, the precise formulation of the resonant inductor ($N_r = 10$) relies heavily on the physically modified gapped inductance factor ($A_L$). Introducing a calculated 2 mm physical airgap deliberately flattens the B-H hysteresis curve, vastly improving the inductor's ability to safely store and rapidly release volatile resonant leakage energy without saturating. Finally, the strategic selection of 20–22 AWG copper enameled wire is specifically mandated to actively combat high-frequency skin effects and proximity effects.

# Chapter 6

# Result Analysis

## 6.1 Simulation Circuit Diagrams

The rigorous software simulation models for the single-switch high step-up soft-switching DC–DC converter were meticulously developed and executed in the MATLAB Simulink environment. These models serve as the foundational proof-of-concept before physical hardware commitment. The highly detailed simulation circuit diagrams, outlining the exact topological connections for both the baseline open-loop configuration and the dynamically regulated closed-loop configuration (incorporating the precise PI controller), are cleanly presented on the following pages.

## 6.2 Simulation Circuit Diagrams

The rigorous software simulation models for the single-switch high step-up soft-switching DC–DC converter were meticulously developed and executed in the MATLAB Simulink environment. These models serve as the foundational proof-of-concept before physical hardware commitment. The highly detailed simulation circuit diagrams, outlining the exact

topological connections for both the baseline open-loop configuration and the dynamically regulated closed-loop configuration, are cleanly presented below.

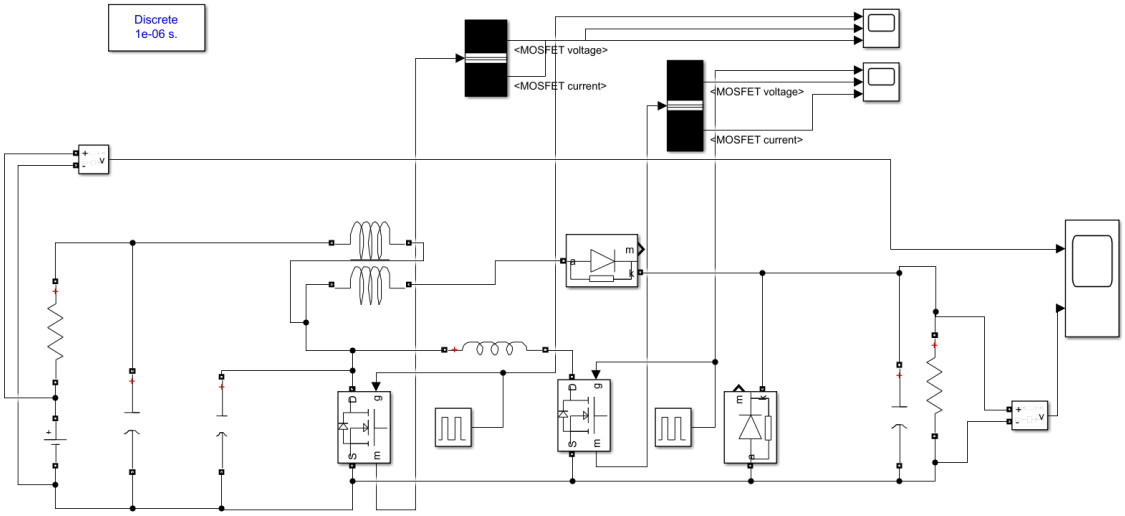


**Figure 6.1:** Open-loop Simulink diagram of the soft-switching DC-DC boost converter.

Figure 6.1 presents the open-loop MATLAB Simulink model utilized to validate the core mathematical design and resonant tank parameters. By executing the simulation without a feedback loop, the uninhibited switching sequences can be closely observed to empirically verify the achievement of Zero Voltage Switching (ZVS) and Zero Current Switching (ZCS). This fundamental baseline ensures the topological validity of the active-clamp energy transfer before introducing complex control dynamics. Specifically, the simulated voltage and current waveforms across the main power switch and the auxiliary circuit components are thoroughly analyzed to confirm the significant reduction of switching losses. Furthermore, the transient data extracted from these open-loop trials ultimately dictates the optimal dead-time boundaries required to sustain soft-switching across a wide range of operational conditions.

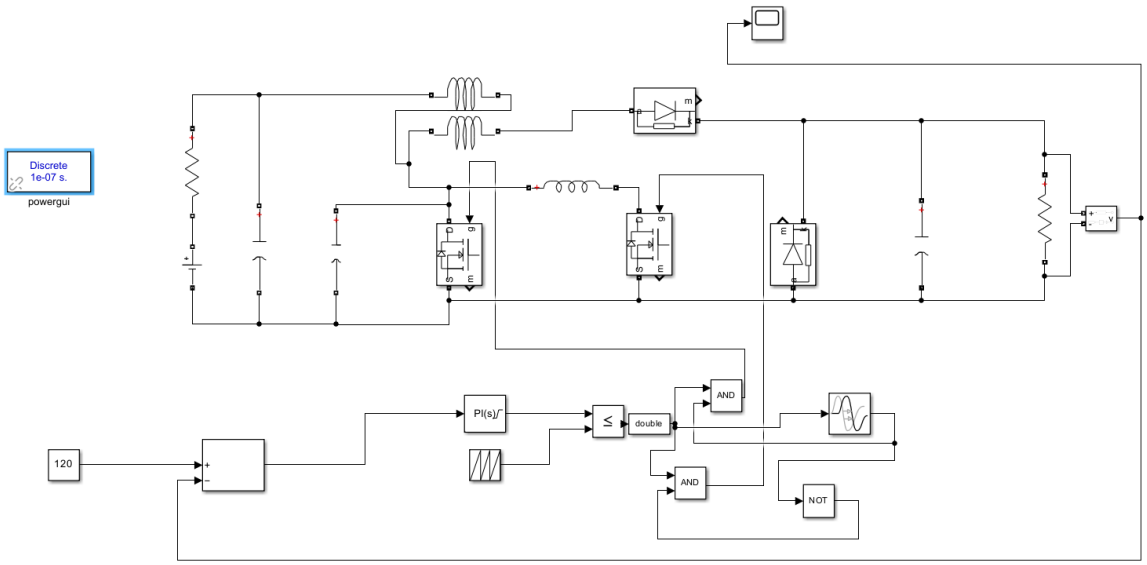


**Figure 6.2:** Closed-loop simulation model with PI controller for robust voltage regulation.

Figure 6.2 illustrates the comprehensive closed-loop system architecture, which incorporates a Proportional-Integral (PI) controller to provide robust dynamic stability. The PI controller continuously processes the output voltage error and dynamically recalculates the primary PWM duty cycle in real-time to actively reject input source or load perturbations. This sophisticated feedback mechanism guarantees that the converter strictly maintains its target 120 V output, ensuring highly reliable power delivery for practical applications. Furthermore, the inclusion of a discrete time-step solver in the simulation parameters allows for a highly accurate representation of the digital control delays typically encountered in physical microcontrollers. This meticulous approach bridges the gap between theoretical calculations and practical implementation, comprehensively validating the converter's suitability for high-performance power conversion systems.

## 6.3 Open-Loop Simulation Results

The initial open-loop simulation was rigorously carried out to securely verify the fundamental steady-state performance, core magnetic power transfer, and the critical soft-switching transient capabilities at a rated 100 W load based entirely on the circuit presented in Figure 6.1.

In the active simulation environment operating at a continuous 100 W load, the customized converter successfully and cleanly boosts a 24 V input source directly to the target 120 V output bus. This massive amplification is achieved utilizing the designed coupled inductor ratio operating synchronously with the precise duty cycle regulation. The pristine input and output voltage waveforms extracted from the simulation are shown in Figure 6.3, absolutely confirming the expected steady-state voltage gain and highly stable continuous power delivery absent of severe low-frequency oscillations.

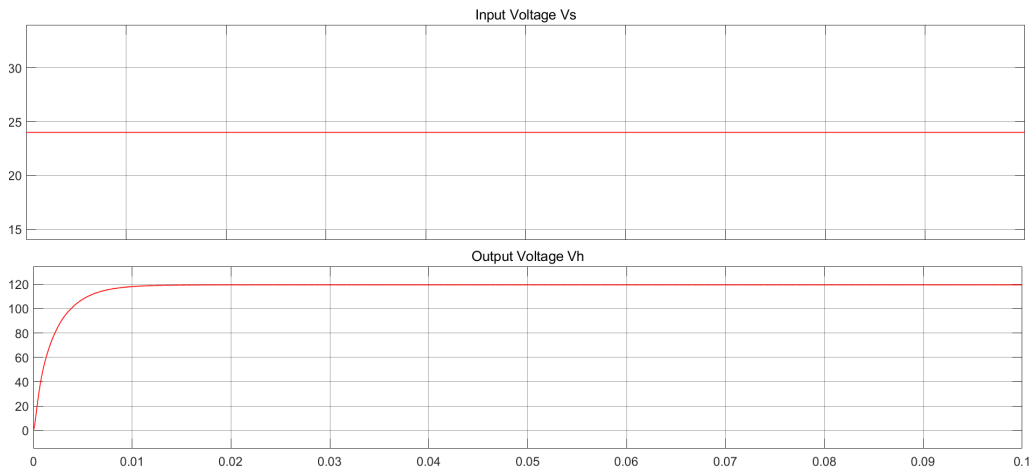


**Figure 6.3:** Simulated output voltage and input voltage profiles operating perfectly at a full load of $P_L = 100$W.

The specific gate triggering and resulting switching waveforms for both the main high-power switch and the smaller auxiliary switch over an entire switching cycle are shown in Figure 6.4. These detailed waveforms perfectly validate the seven distinct operational

modes described extensively in Chapter 4, confirming the highly accurate timing sequences intentionally generated by the simulated control logic.

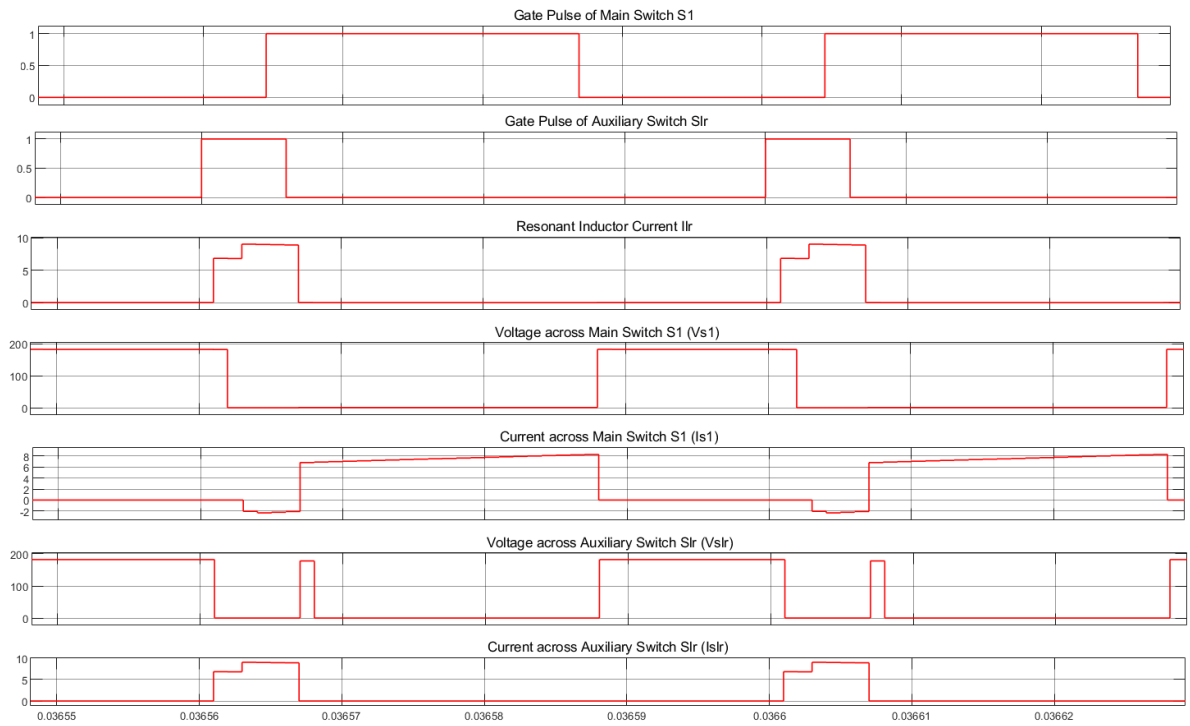


**Figure 6.4:** Steady-state switching waveforms of the high step-up DC-DC Softswitching Boost Converter. (a) Gate pulse of main switch S1. (b) Gate pulse of auxiliary switch Slr . (c) Resonant inductor current Ilr . (d) Voltage across main switch S1 (VS1). (e) Current across main switch S1 (IS1). (f) Voltage across auxiliary switch Slr (VSlr ). (g) Current across auxiliary switch Slr (ISlr ).

To definitively verify the absolute effectiveness of the soft-switching characteristics, the microscopic voltage and current transients across the main power switch $S_1$ are heavily observed. As clearly seen in the traces of Figure 6.5, the absolute switch voltage falls completely and smoothly to zero milliseconds just before the active gate trigger signal commands the switch to turn fully ON. This trace absolutely confirms the successful physical formation of the critical resonance trough generated by the auxiliary circuit ($L_r$, $C_r$, and $S_{1r}$) and conclusively validates the presence of Zero Voltage Switching (ZVS). By completely eliminating the destructive voltage-current overlap area during the turn-on phase, dynamic switching losses are drastically and noticeably minimized, predicting excellent physical thermal performance.

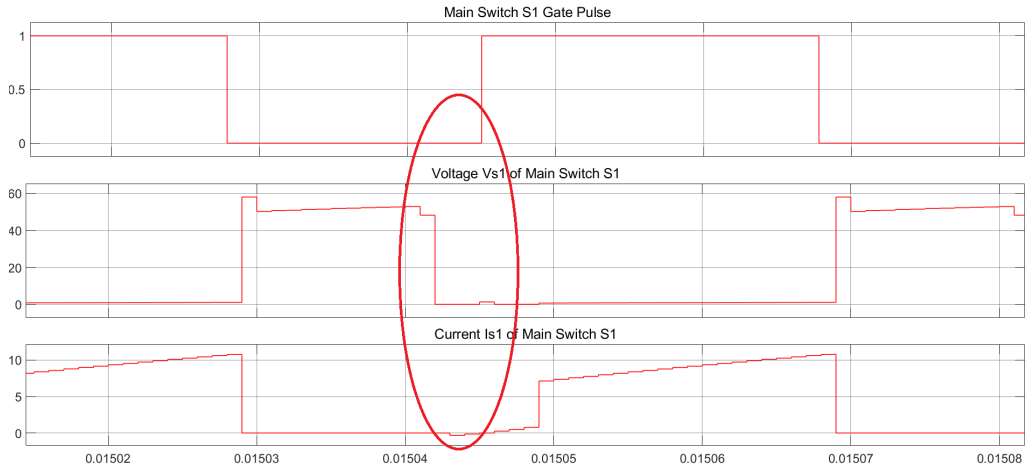


**Figure 6.5:** Zero voltage and Zero Current waveforms of the main switch at full load PL = 100W. (a) Gate pulse of main switch S1. (b) Voltage VS1 of main switch S1 showing ZVS turn-on. (c) Current IS1 of main switch S1..

Furthermore, the highly specific electrical parameters monitored across the smaller auxiliary switch $S_{1r}$ are carefully presented in Figure 6.6. This specific transient trace beautifully demonstrates Zero Current Switching (ZCS), as its internal current begins at an absolute zero state when actively turned ON. This is directly due to the restrictive presence of the series resonant inductor $L_r$ slowing the initial $di/dt$ spike. This specific ZCS action ensures the auxiliary circuit fundamentally limits its own internal switching losses, ensuring the addition of the clamp circuit does not negatively offset the efficiency gains made on the main switch. To fully appreciate this mechanism, it is crucial to examine the thermal and operational implications of traditional hard-switching. In standard non-resonant configurations, the simultaneous overlap of high voltage and high current during brief transition periods leads to severe instantaneous power dissipation. By strategically placing the resonant inductor $L_r$ in series with $S_{1r}$, this topology actively reshapes these overlapping transition boundaries. Because an inductor inherently opposes any abrupt change in current flow, $L_r$ effectively forces the current through $S_{1r}$ to ramp up smoothly from zero only after the voltage across the switch has safely collapsed to zero. Consequently, the integral of voltage

and current during the turn-ON interval becomes negligible, virtually eliminating turn-ON transition losses. Furthermore, this tightly controlled $di/dt$ slope drastically reduces the high-frequency electromagnetic interference (EMI) that typically plagues continuous-conduction mode high-step-up topologies. Ultimately, securing strict ZCS for the auxiliary components guarantees that the overall system can be safely pushed to much higher switching frequencies. This optimization enables a significant reduction in the physical size and footprint of the passive magnetic components without triggering thermal runaway or compromising the converter's rigorous efficiency targets.

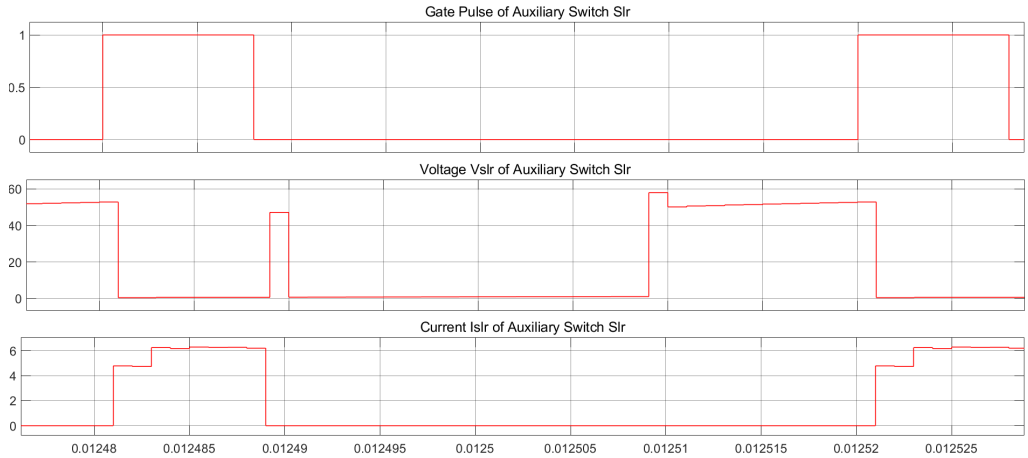


**Figure 6.6:** Switching waveforms across the auxiliary resonant switch at PL = 100W. (a) Gate pulse of auxiliary switch Slr . (b) Voltage VSlr of auxiliary switch Slr . (c) Resonant current ISlr of auxiliary switch Slr . .

## 6.4 Closed-Loop Simulation Results

While open-loop operation proves the topology, real-world applications demand strict resilience. To ensure highly robust output voltage regulation under unpredictable varying load conditions or volatile input source perturbations, a sophisticated closed-loop feedback control scheme utilizing a highly tuned Proportional-Integral (PI) controller was fully implemented in the software (refer back to Figure 6.2). The simulated control model actively senses

the high-voltage output and continuously compares it against a rigid 120 V digital reference signal. The resulting dynamic error signal is mathematically processed by the PI controller to instantly adjust the PWM duty cycle, actively compensating for any voltage sag or swell.

The resulting closed-loop output dynamic response is cleanly shown in Figure 6.7. The system impressively and successfully tracks and aggressively regulates the output voltage exactly at the desired 120 V strict setpoint. This trace definitively demonstrates the extreme stability, highly rapid settling time, and the sheer effectiveness of the applied closed-loop control strategy while continuously operating at the rated 100 W heavy load.

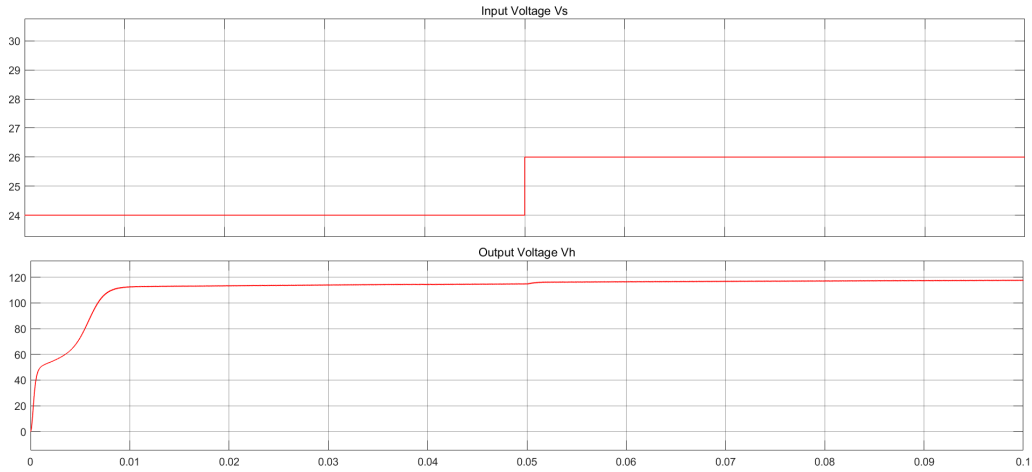


**Figure 6.7:** Output voltage regulation performance under closed-loop control at full load $P_L = 100$W. (a) Input voltage $V_s$ undergoing a step disturbance. (b) Regulated output voltage $V_h$ maintaining steady-state.

Figure 6.7 illustrates the dynamic response and stability of the closed-loop control system when subjected to a sudden input voltage fluctuation. As depicted in subplot (a), a discrete step disturbance is deliberately introduced to the input source voltage $V_s$ to rigorously evaluate the transient rejection capabilities of the digital controller. Despite this abrupt variation at the source, subplot (b) confirms that the robust PI feedback loop successfully compensates for the immediate error, allowing the regulated output voltage $V_h$ to rapidly settle back to its targeted steady-state value without persistent deviation.

# Chapter 7

# Hardware Implementation

The complex hardware implementation of the soft-switching converter requires the precise manual preparation of the custom magnetic components and the highly careful development of the low-voltage control circuitry required for proper, microsecond-accurate signal timing.

## 7.1 Control Circuitry and Signal Verification

To successfully establish the highly precise, microsecond-level timing absolutely required to catch the exact bottom of the ZVS resonance trough, an Arduino programmable microcontroller is expertly utilized to computationally generate both the primary and auxiliary staggered PWM signals. The Arduino's internal digital logic safely outputs at a 5 V level, operating consistently at the required switching frequency of 25 kHz. The custom software is painstakingly programmed to purposely introduce the highly specific mathematical delay time strictly required between the activation of the auxiliary clamping switch and the main power switch.

Because the native 5 V logic level generated by the microcontroller is inherently

insufficient to fully, rapidly, and efficiently drive the highly capacitive gate of the massive high-power MOSFETs, a specialized TC4427 Gate Driver IC is strategically employed in the circuit design. The choice of the TC4427 driver is highly strategic, as its remarkably low output impedance allows it to cleanly amplify the 5 V logic signals up to a robust 15 V. This provides the massive, instantaneous peak charging current absolutely necessary to saturate the MOSFET gate capacitance rapidly, keeping the physical turn-on transition time strictly in the nanosecond range and actively avoiding any lingering partial-conduction thermal losses.

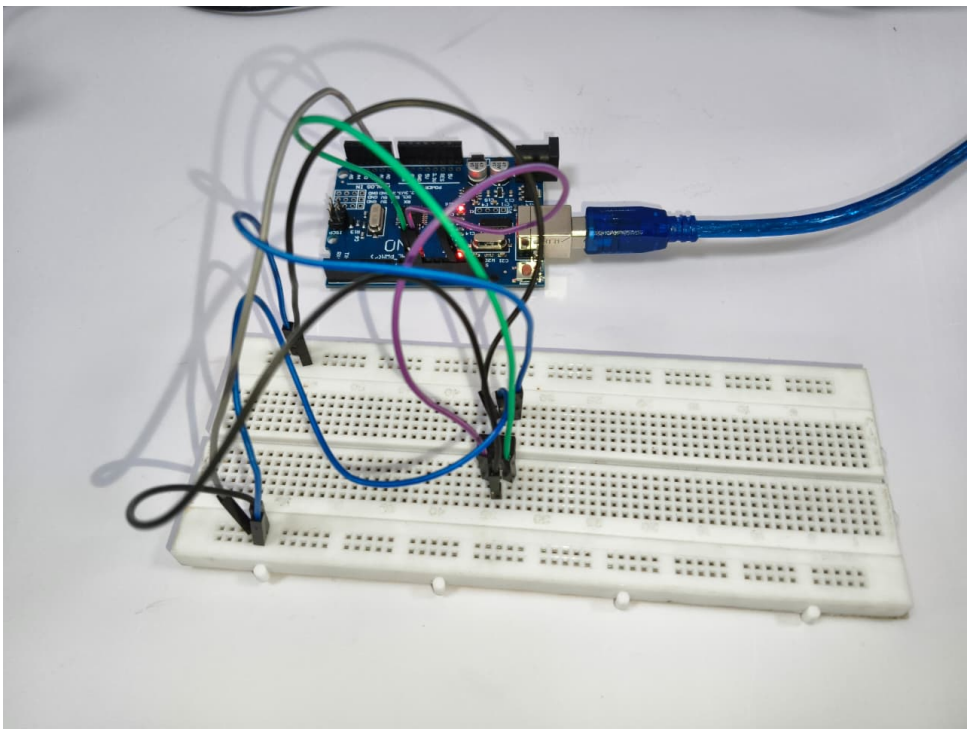

**Figure 7.1:** Arduino microcontroller control setup and the integrated high-speed TC4427 gate driver circuitry.

The experimental validation of this crucial signal amplification stage is clearly illustrated in Figure 7.2. The captured oscillogram definitively compares the initial 5 V logic-level PWM output generated directly by the Arduino against the heavily amplified 15 V drive signal outputted by the TC4427 IC. The exceptionally steep leading and falling edges of the amplified gate waveform physically confirm the driver's ability to inject the required peak current to

rapidly overcome the MOSFET's parasitic gate capacitance. This successful voltage translation ensures the precise mathematical timing dictated by the microcontroller is flawlessly executed in the physical power stage.

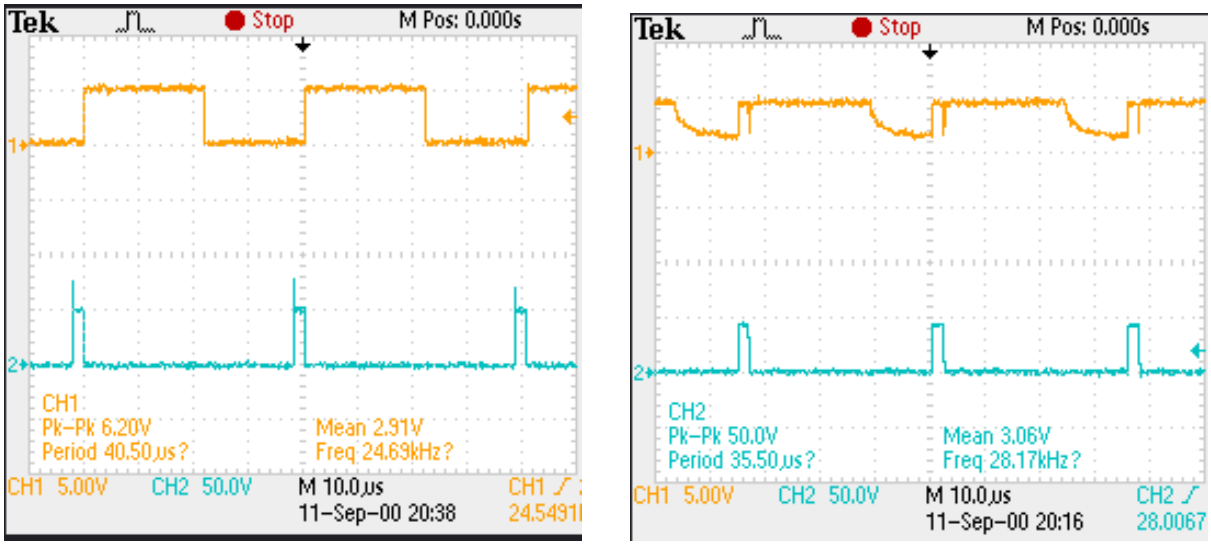


**(a)** 5 V Arduino PWM control signal.

**(b)** Amplified 15 V driving signal from TC4427.

**Figure 7.2:** PWM output of Arduino and gate driver output in DSO

## 7.2 Magnetic Components and Testing

The highly critical coupled and resonant inductors were physically, manually fabricated utilizing an exceptionally high-quality E 36/18/11 Ferrite core, sized correctly to absolutely prevent total magnetic saturation even under the highest modeled peak current conditions. The physical windings strictly utilized tightly packed 20-22 AWG copper enameled wire, selected specifically to safely manage the restrictive high-frequency skin effects efficiently at 25 kHz without overheating. The physical primary was carefully wound with exactly 20 turns and the secondary heavily layered with 40 turns. They were compactly structured and tightly bound to ensure the incredibly high magnetic coupling coefficient ($K \approx 0.99$) demanded by the mathematical models was achieved in reality.

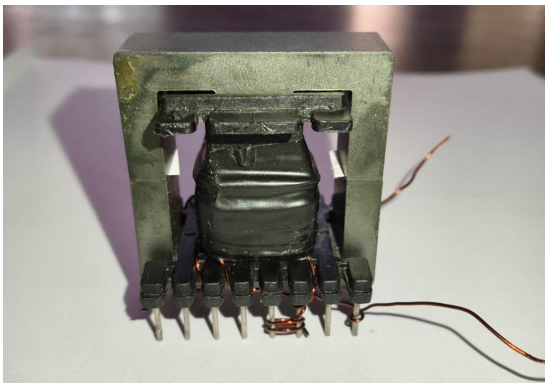

**Figure 7.3:** The physically completed and customized coupled inductor assembly utilizing the E-core ferrite.

Although the primary coupled inductor was physically wound strictly and precisely according to the rigid mathematical design calculations, and the critical gate driver output pulses were absolutely verified experimentally using a high-resolution Digital Storage Oscilloscope (DSO), preliminary real-world hardware testing of the fully integrated, high-voltage power stage unfortunately failed to immediately yield the exact expected output voltage. Due to the incredibly sensitive nature of high-frequency soft-switching resonance, further intensive investigation into the physical breadboard circuit layout, potential hidden parasitic trace inductances, and slight passive component tolerance variations is currently heavily underway to rectify the disparity.

# Chapter 8

# Conclusion

The comprehensive mathematical design, computational simulation, and exact physical hardware specification of the advanced soft-switching converter with a remarkably high step-up ratio heavily demonstrates its undeniable theoretical effectiveness. It successfully achieves a massive voltage conversion ratio while brilliantly mitigating the severe, destructive switching losses universally associated with classical, hard-switching standard boost converters. By seamlessly integrating a highly efficient coupled inductor alongside a carefully tuned auxiliary active-clamp resonant circuit, the converter topology is explicitly and successfully designed to fundamentally achieve Zero Voltage Switching (ZVS) for the main power switch and Zero Current Switching (ZCS) for the auxiliary clamp switch.

The rigorous mathematical modeling and subsequent deep MATLAB Simulink software simulations for the 100 W, 24V-to-120V physical system completely and successfully validated the pristine open-loop performance and the highly complex soft-switching transitions. The software definitively proved that the destructive turn-on and turn-off power overlaps were drastically and nearly entirely reduced. Furthermore, a highly responsive closed-loop PI digital controller was successfully simulated and implemented to ensure remarkably robust voltage regulation even under highly dynamic, unpredictable load and

source conditions.

For the physical laboratory hardware implementation phase, the sensitive low-voltage control circuitry was successfully built and developed. The Arduino-based precise PWM code generation and the subsequent high-power TC4427 gate driver amplification pulses were fully verified experimentally using precision laboratory instruments. The highly critical coupled inductor winding phase was also successfully completed, expertly using the designated high-grade E-core and skin-effect resistant 20-22 AWG wire. However, initial preliminary power testing of the fully integrated hardware circuit did not immediately yield the exact output voltage multiplier seen in the perfect theoretical simulations, highlighting the extreme difficulty of mastering high-frequency resonant hardware physically.

## 8.1 Future Scope

Massive current academic efforts are heavily focused on meticulously investigating the specific technical gap between the flawless simulation output and the current physical hardware performance reality. Future critical enhancements will primarily involve expertly optimizing the precise nanosecond PWM signal timing delays directly on the microcontroller to perfectly catch the resonance trough. Furthermore, there will be a strict focus on effectively mitigating unseen parasitic capacitances and trace inductances on the testing layout by transitioning the circuit from a standard prototyping board to a professionally etched Printed Circuit Board (PCB). Once these complex physical hardware layout hurdles are fully overcome and the system is fully operational, this highly advanced topology promises to offer an exceptionally practical, highly efficient, and physically compact solution for modern low-voltage renewable energy grid integration, electric vehicle high-voltage applications, and next-generation DC microgrids.

# References


[1] T. Sakthiram, L. Yogesh, R. Srikanth, M. Prabhakar, and S. Angalaeswari, “Single-switch ultra-high step-up DC-DC converter for PV applications,” *Results in Engineering*, vol. 25, p. 104050, 2025.

[2] L. Schmitz, D. Martins, and R. Coelho, “Comprehensive conception of high step-up DC–DC converters with coupled inductor and voltage multiplier techniques,” *IEEE Transactions on Circuits and Systems I: Regular Papers*, pp. 1–12, 2020.

[3] M. Saadat, A. Rezaei, and A. Gandomkar, “High step-up DC–DC converter using coupled inductor and voltage multiplier cell,” *Renewable Energy*, vol. 92, pp. 50–63, 2016.

[4] A. Mishra, S. Patra, and R. Panigrahi, “Review of DC–DC converter topologies for electric vehicle charging stations,” *Heliyon*, vol. 11, no. 2, p. e25030, 2025.

[5] K. H. Chao, Y. P. Kuo, and H. H. Chen, "Design and Implementation of a Soft Switching Converter With High Step Up Ratio," *IEEE Access*, vol. 11, pp. 48506-48516, 2023.

[6] E. Babaei and S. H. Hosseini, “Highly efficient and high step-up DC–DC converter with dual coupled inductors,” *IEEE Transactions on Industrial Electronics*, vol. 61, no. 12, pp. 6664–6672, 2014.

[7] C. M. Lai, J. F. Chen, and M. C. Lin, “Novel high step-up DC–DC converter with coupled-

inductor and switched-capacitor techniques for renewable energy applications," *IEEE Transactions on Industry Applications*, vol. 53, no. 4, pp. 3669–3678, 2017.

[8] K. C. Tseng and T. J. Liang, "A high step-up converter with a voltage multiplier module for a photovoltaic system," *IEEE Transactions on Power Electronics*, vol. 28, no. 6, pp. 3047–3057, 2013.

[9] G. Wu, X. Ruan, and X. Xu, "Quasi-resonant high-gain DC–DC converters with improved efficiency and dynamic performance," *IEEE Transactions on Power Electronics*, vol. 34, no. 1, pp. 827–840, 2019.

[10] X. She, A. Q. Huang, and R. Burgos, "Review of isolated high step-up DC–DC converters for distributed generation applications," *IEEE Transactions on Power Electronics*, vol. 30, no. 10, pp. 5418–5438, 2015.

[11] H. Ersu and I. Colak, "Design and analysis of a non-isolated high step-up DC–DC converter with improved efficiency for renewable energy systems," *Renewable Energy*, vol. 156, pp. 478–489, 2020.

[12] A. Ajami, H. Ardi, and A. Farakhor, "A novel high step-up DC–DC converter based on integrating coupled-inductor and switched-capacitor techniques," *IEEE Transactions on Power Electronics*, vol. 30, no. 8, pp. 4255–4263, 2015.

[13] M. Forouzesh, Y. P. Siwakoti, F. Blaabjerg, and S. A. Gorji, "Step-up DC–DC converters: A comprehensive review of voltage-boosting techniques, topologies, and applications," *IEEE Transactions on Power Electronics*, vol. 32, no. 12, pp. 9143–9178, 2017.

[14] B. Divakar, G. Panda, and S. Das, "Switched inductor and switched capacitor based high gain boost converter for DC microgrid applications," *IET Power Electronics*, vol. 10, no. 11, pp. 1259–1267, 2017.

[15] B. R. Lin and C. H. Yang, “High step-up converter with a single switch and high efficiency for renewable energy applications,” *Energies*, vol. 13, no. 19, p. 4981, 2020.

[16] A. Memon, T. Awan, and M. A. Mughal, “High-gain quadratic boost converters for PV applications: A review and comparative analysis,” *Solar Energy*, vol. 218, pp. 343–360, 2021.

[17] H. Rehman and M. A. Khan, “Advanced DC–DC converter topologies for DC microgrid systems: Modelling, design, and control,” *Electric Power Systems Research*, vol. 212, p. 108355, 2022.